DA 175 Actuator

Technical Info

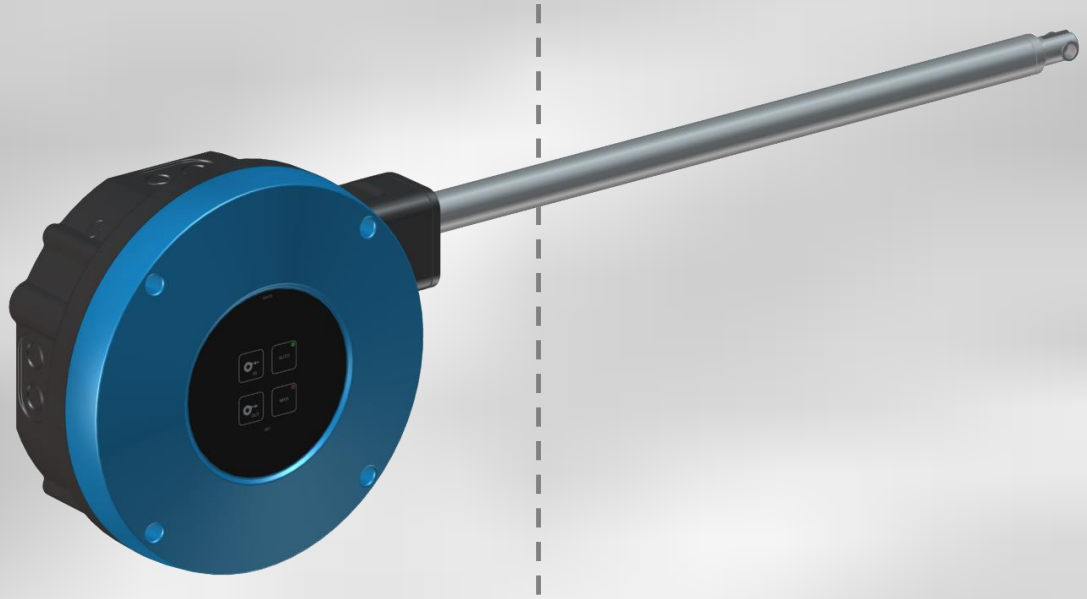

SKOV

PRODUCT DESCRIPTION

The DA 175 is an actuator that is specially designed for control of air intake inlets.

The DA 175 can be set to modes ON/OFF, stepless or analogue with a jumper on the circuit board. These three settings can also be reserved.

The DA 175 is available in several variations with a tensile force of 100 kg, 150 kg, 300 kg or 600 kg:

- 432110 DA 175-100 actuator 24 V DC
- 432111 DA 175-150 actuator 24 V DC
- 432112 DA 175-300 actuator 24 V DC
- 432113 DA 175-600 actuator 24 V DC

- 432114 DA 175-100 actuator 230 V
- 432115 DA 175-150 actuator 230 V
- 432116 DA 175-300 actuator 230 V
- 432117 DA 175-600 actuator 230 V

When the DA 175 is equipped with 24 V DC, emergency opening is possible through battery power in the event of a failure or power outage.

The DA 175 has a compact design that is easy to clean.

The DA 175 can be controlled manually.

The DA 175 can be set with an optional end stop for open- and closed positions.

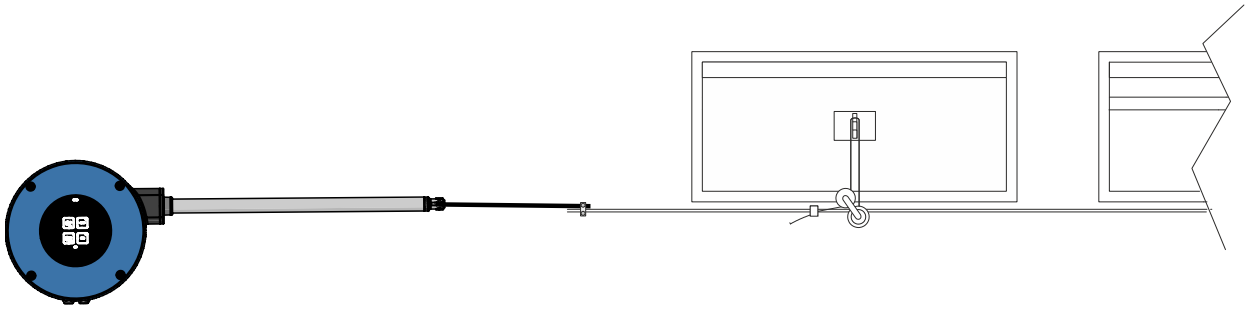

PRODUCT SURVEY



432110 DA 175-100 actuator 24 V DC
432111 DA 175-150 actuator 24 V DC
432112 DA 175-300 actuator 24 V DC
432113 DA 175-600 actuator 24 V DC

The DA 175 is used primarily for controlling air intake inlets and can be placed either inside- or outside the livestock house section.

Mounting sets must be ordered separately.

Emergency opening

If emergency opening is required, the DA 175 24 V should be used. Emergency opening is not available on the DA 75A 230 V.



432114 DA 175-100 actuator 230 V
432115 DA 175-150 actuator 230 V
432116 DA 175-300 actuator 230 V
432117 DA 175-600 actuator 230 V

The DA 175 is used primarily for controlling air intake inlets and can be placed either inside- or outside the livestock house section.

Mounting sets must be ordered separately.



432119 175 kit for double drive

Is used for double drive with two wires.

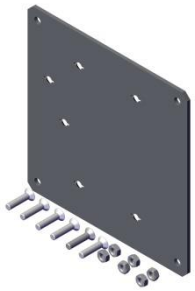

432118 175 mounting plate complete

Used as a reinforcement when installing on sandwich element walls and other walls without sufficient strength/attachment.

Ordered separately.

TECHNICAL DATA

DA 175 24 V DC

	DA 175-100	DA 175-150	DA 175-300	DA 175-600
Item number.	432110	432111	432112	432113
Electrical				
Operating voltage [V DC] ±20%	24	24	24	24
Supply frequency [Hz]	50/60	50/60	50/60	50/60
Power consumption [A]	0.5	0.7	1.0	2.0
Feedback signal [V]	0-10	0-10	0-10	0-10
Control signal [V]	24	24	24	24
Control signal analog [V]	0-10	0-10	0-10	0-10
Input impedance [KΩ]	100	100	100	100
Output impedance [KΩ]	2.2	2.2	2.2	2.2
Mechanical				
Running time between end stops [min.]	8.3	8.3	8.3	8.3
Wire [mm]	Ø4 ss	Ø4 ss	Ø4 ss	Ø4 ss
Max. pull length [cm]	60	60	60	60
Max. tensile force [kg]	100	150	300	600
Cable knock-out punches	6 M20	6 M20	6 M20	6 M20
Max. cable length at 1.5mm^2 [M]	0 →290	0 →220	0 →135	0 →60
Max. cable length at 2.5mm^2 [M]			136 →225	61 →100
Max. cable length at 4.0mm^2 [M]				101 →165
Environment				
Ambient temperature [°C]	-10 to +45	-10 to +45	-10 to +45	-10 to +45
Storage temperature [°C]	-25 to +60	-25 to +60	-25 to +60	-25 to +60
Protection class*	IP 65	IP 65	IP 65	IP 65
Shipping				
Shipping dimensions [mm]	990×340×150	990×340×150	990×340×150	990×340×150
Shipping weight [g]	6150	6150	6150	6150

Table 1: Technical data DA 175 24 V

DA 175 230 V

	DA 175-100	DA 175-150	DA 175-300	DA 175-600
Item number	432114	432115	432116	432117
Electrical				
Operating voltage [V] ±20%	230	230	230	230
Supply frequency [Hz]	50/60	50/60	50/60	50/60
Power consumption [A]	0.5	0.5	0.5	0.5
Feedback signal [V]	0-10	0-10	0-10	0-10
Control signal [V]	24	24	24	24
Control signal analog [V]	0-10	0-10	0-10	0-10
Input impedance [KΩ]	100	100	100	100
Output impedance [KΩ]	2.2	2.2	2.2	2.2
Mechanical				
Running time between end stops [min.]	8.3	8.3	8.3	8.3
Wire [mm]	Ø4 ss	Ø4 ss	Ø4 ss	Ø4 ss
Max. pull length [cm]	60	60	60	60
Max. tensile force [kg]	100	150	300	600
Cable knock-out punches	6 M20	6 M20	6 M20	6 M20
Max. cable length at 1.5mm^2 [M]				0 →290
Environment				
Ambient temperature [°C]	-10 to +45	-10 to +45	-10 to +45	-10 to +45
Storage temperature [°C]	-25 to +60	-25 to +60	-25 to +60	-25 to +60
Protection class*	IP 65	IP 65	IP 65	IP 65
Shipping				
Shipping dimensions [mm]	990×340×150	990×340×150	990×340×150	990×340×150
Shipping weight [g]	6500	6500	6500	6500

Table 2: Technical data DA 175 230 V

Dimensioned sketch

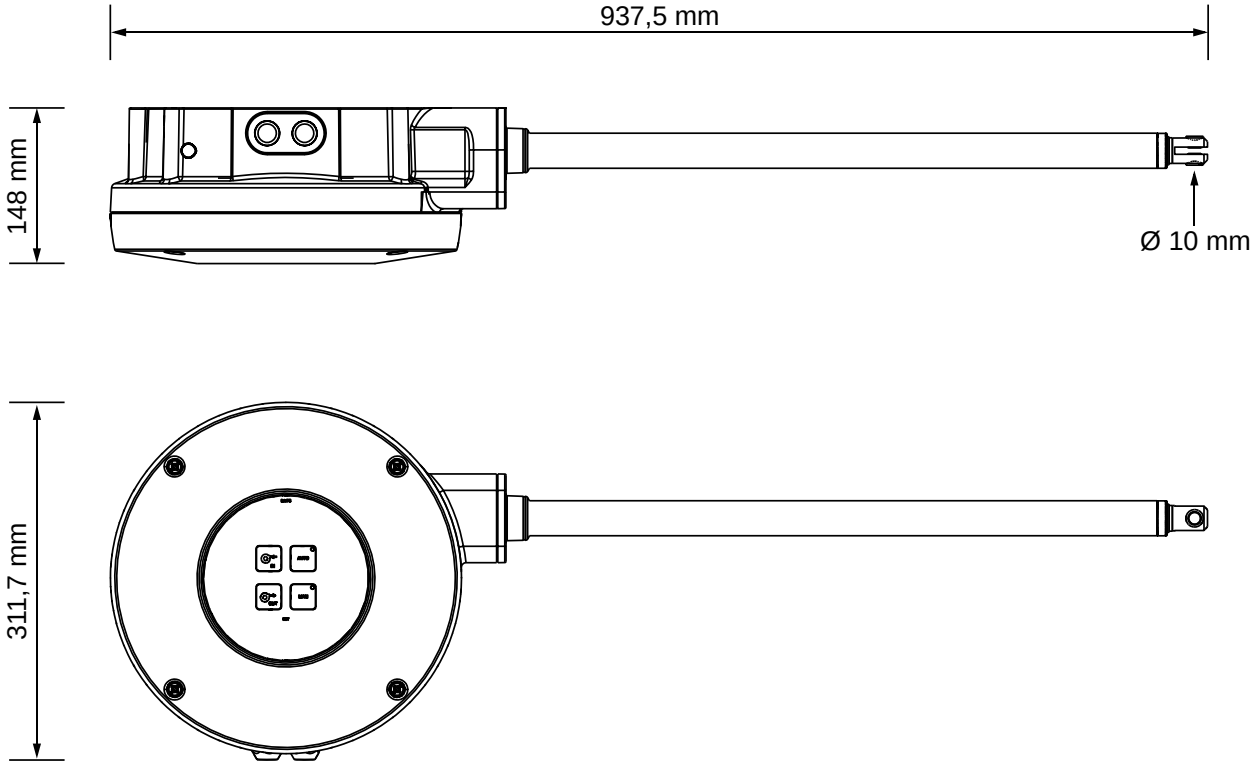

Figure 1: DA 175

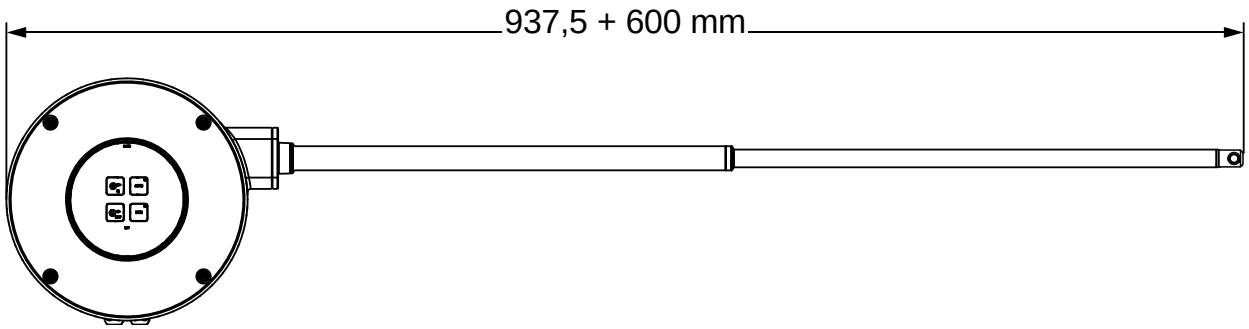

Figure 2: DA 175 full length

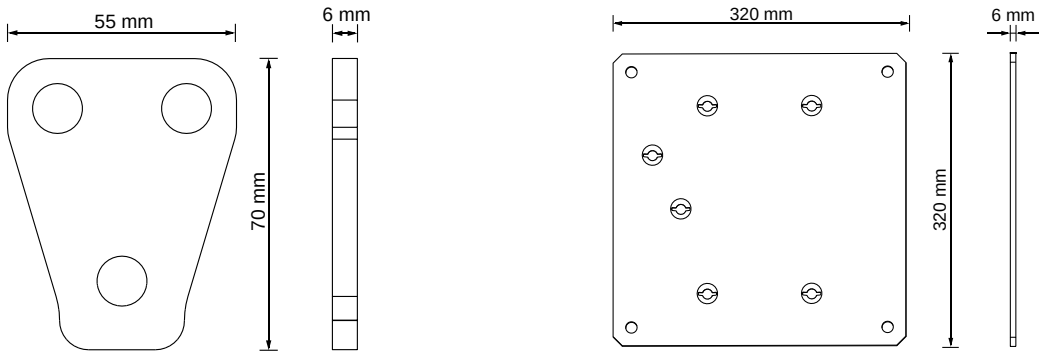

Figure 3: Accessories



2015.06.09 • 8.2.8 • EN • Made in Denmark

SKOV A/S • Hedelund 4 • Glyngøre • DK-7870 Roslev
Tel. +45 72 17 55 55 • Fax +45 72 17 59 59 • www.skov.com • E-mail: skov@skov.dk