Gasolec Orion Vertical Light Units

VLU Orion-3 Positions **VLU Orion-Cable** **VLU Orion-HIP**



Product:	Page:
Gasolec VLU Orion-3 Positions	2
Gasolec VLU Orion-Cable	5
Gasolec VLU Orion-HIP	8

Gasolec VLU Orion–3 Positions



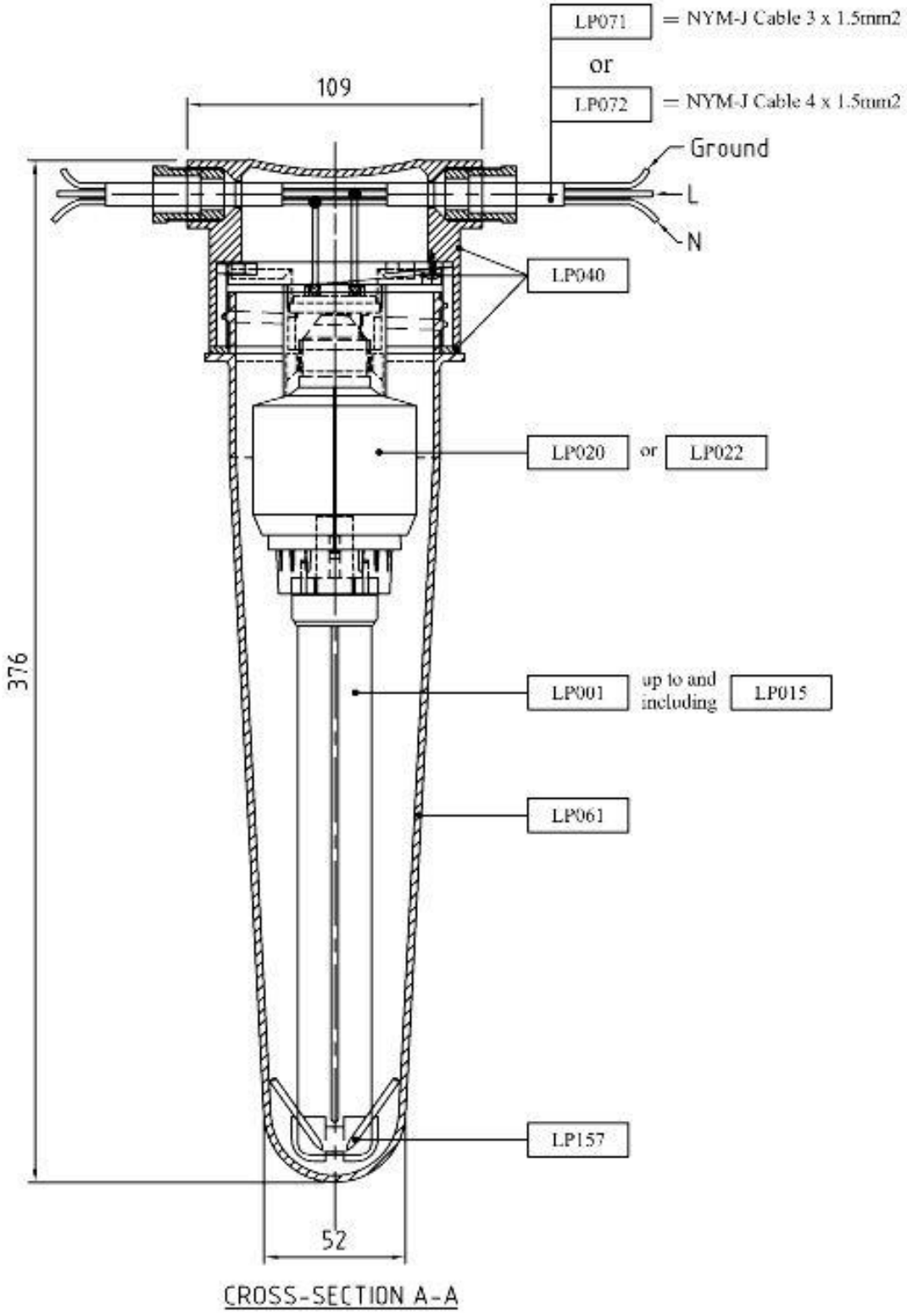

Gasolec VLU Orion–3 Positions

Gasolec VLU Orion–3 Positions

Gasolec Code Nr.	#	Description:	
LP001 Up to and including LP008	1	Orionlux Lamps	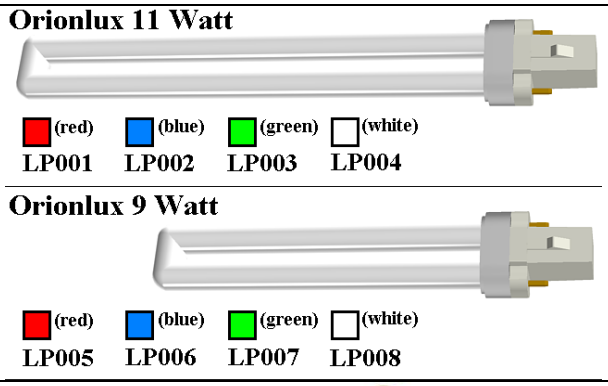
LP020 Or LP022	1	Orion Adapter 230/50 E27 Or Orion Adapter 230/60 E27	
LP040 Incl.: -LP055 -LP246	1	Fixture VLU-3 positions complete Incl.: -LP055 - Sealing ring for Lamp-screw-on-cover -LP246 - Interior set for Gasolec VLU-Cable or VLU-3 Position or VLU-HIP	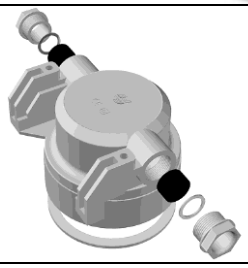 
LP061	1	Lamp-screw-on-cover	
LP071 Or LP072	Mtr	NYM-J Cable 3x1,5mm^2 Or NYM-J Cable 4x1,5mm^2	No image.
LP157	1	Lamp Fixation Unit, standard included in each VLU Cable/3-Positions/HIP light unit - This replaces the LP154 –	

Gasolec VLU Orion – Cable



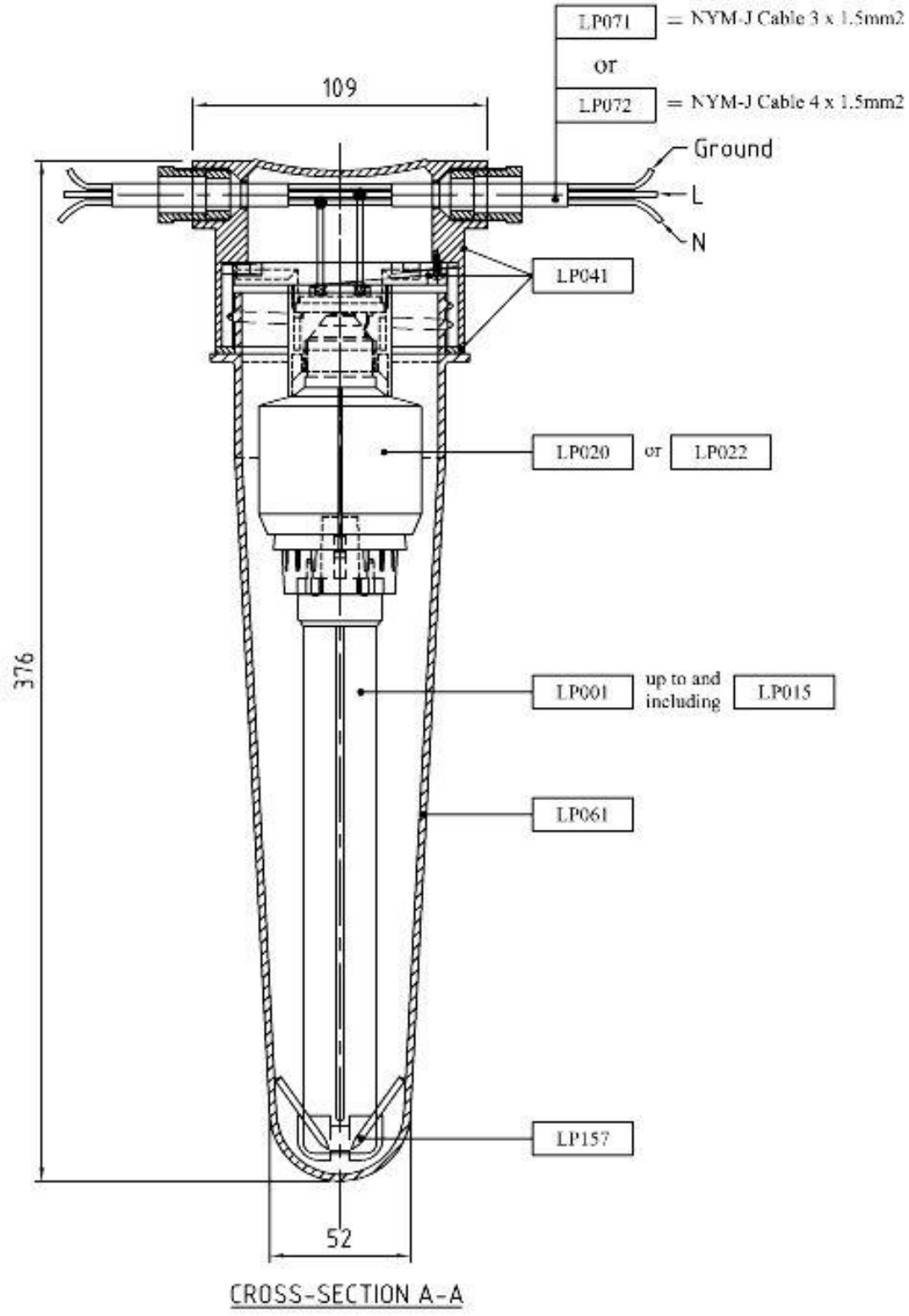

CROSS-SECTION A-A

Gasolec VLU Orion–Cable

Gasolec Code Nr.	#	Description:	
LP001 Up to and including LP008	1	Orionlux Lamps	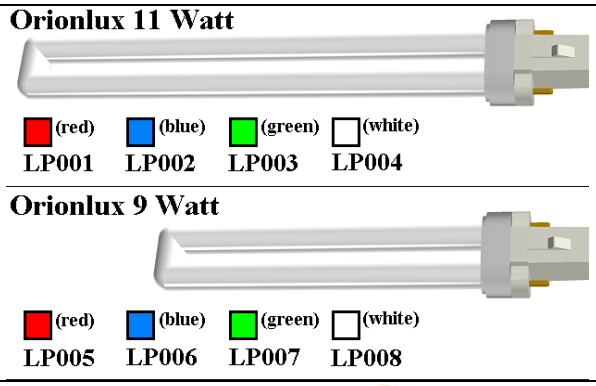
LP020 Or LP022	1	Orion Adapter 230/50 E27 Or Orion Adapter 230/60 E27	
LP041 Incl.: -LP055 -LP246	1	Fixture VLU-Cable complete Incl.: -LP055 - Sealing ring for Lamp-screw-on-cover LP246 - Interior set for Gasolec VLU-Cable or VLU-3 Position or VLU-HIP	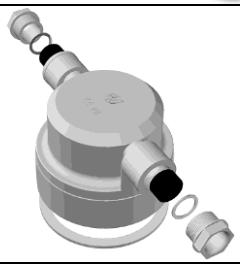 
LP061	1	Lamp-screw-on-cover	
LP071 Or LP072	M	NYM-J Cable 3x1,5mm^2 Or NYM-J Cable 4x1,5mm^2	No image.
LP157	1	Lamp Fixation Unit, standard included in each VLU Cable/3-Positions/HIP light unit - This replaces the LP154 –	

Gasolec VLU Orion-HIP



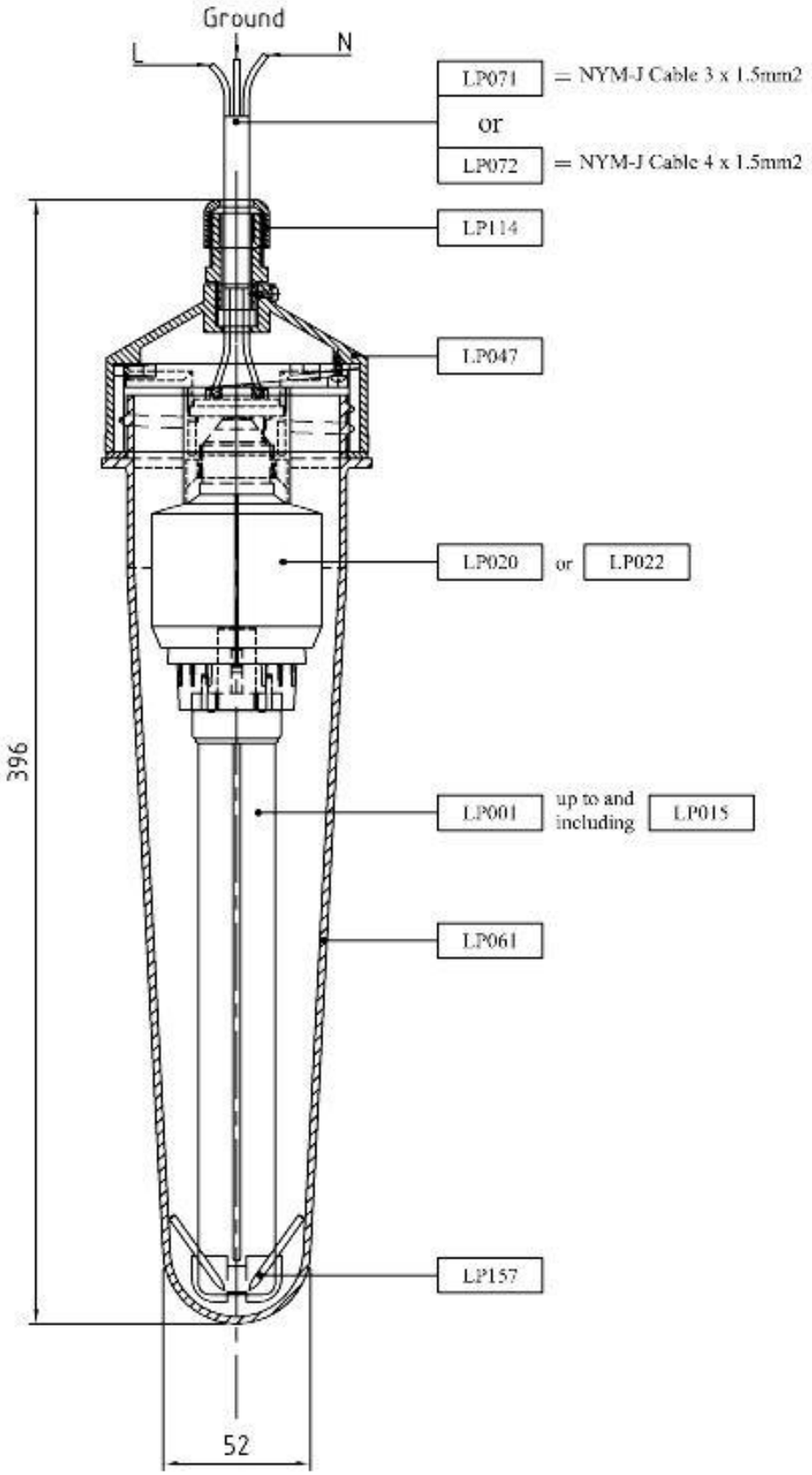

CROSS-SECTION A-A

Gasolec Code Nr.	#	Description:	
LP001 Up to and including LP008	1	Orionlux Lamps	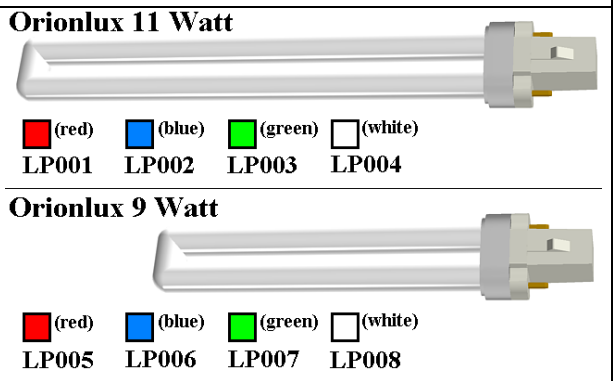
LP020 Or LP022	1	Orion Adapter 230/50 E27 Or Orion Adapter 230/60 E27	
LP047	1	Fixture VLU-HIP Complete Incl.: LP042 – Fixture VLU-HIP LP055 - Sealing ring Lamp-screw-on-cover LP112 – Cable gland (M16x1,5) complete LP246 - Interior set for Gasolec VLU-Cable or VLU-3 Position or VLU-HIP	
LP061	1	Lamp-screw-on-cover	
LP071 Or LP072	Mtr	NYM-J Cable 3x1,5mm^2 Or NYM-J Cable 4x1,5mm^2	No image.
LP157	1	Lamp Fixation Unit, standard included in each VLU Cable/3-Positions/HIP light unit - This replaces the LP154 –	