Light Intensity Controller
Suitable for
Orion 14W LED lamps in Poultry Houses
User Manual
P.N. 310021



TABLE OF CONTENTS

1. INTRODUCTION **1**
2. PROPERTIES OF THE SYSTEM **1**
3. ANALOGUE INPUT (0-10 VOLT) WIRING **1**
4. POWER-UP **2**
5. LCD FUNCTIONAL DISPLAY **2**
6. WIRE DIAMETERS / WIRING **3**
7. MAINTENANCE / SAFETY **3**
8. SHORT CIRCUIT **3**
9. MANUAL OPERATION MODE **3**
10. MANUAL OVERRIDE OPERATIONAL MODE **3**
11. AUTO OPERATION MODE **4**
12. AUTO OVERRIDE OPERATIONAL MODE **4**
13. DIAGNOSTICS **5**
13.1 SYSTEM FAULTS 5
13.1.1 *Over-Voltage Fault:* *5*
13.1.2 *Under-Voltage Fault:* *5*
13.1.3 *Over Current Fault:* *5*
13.1.4 *DC failure:* *5*

Orion LED 14W Light Intensity Controller - User Manual

Please, Read this manual before installing, using or servicing this equipment

Disclaimer
Improper installation, service, adjustment or maintenance can result in property damage, injury or death. A qualified electrician should install this equipment. The supplier, its subsidiaries and affiliates, can not be responsible for ensuring that all appropriate safety precautions, proper installation are followed.
This is the entire responsibility of the installation distributor, the installer and the equipment owner.

1. Introduction

Light intensity continuous control of Orion LED 14W lamps is facilitated by this system for use in poultry houses.
It complies with the specific requirements of the breeders and it is very efficient in energy as well as featuring extended lamps longevity.

2. Properties of the system

The system is designed for mains voltage rated 230V ± 10% at 50/60Hz for Orion LED **14W** lamps.
The Orion LED Intensity Controller can control a maximum of 200 units 14W Orion LED lamps.
The Intensity Controller operates in between 5% to maximum output 100% or turned OFF.
The following methods of operation are available:

1. **Manual mode** Manual mode for operating the Intensity Controller on site as a standalone system.

2. **Auto mode** for operating the Intensity Controller remotely by 0-10V.
   The dimmer can be directly controlled by your poultry house controller through its analog output (0-10 volt).

These methods of operation will be discussed further in the following chapters.

The following figure describes the controls of the Light Intensity Controller:

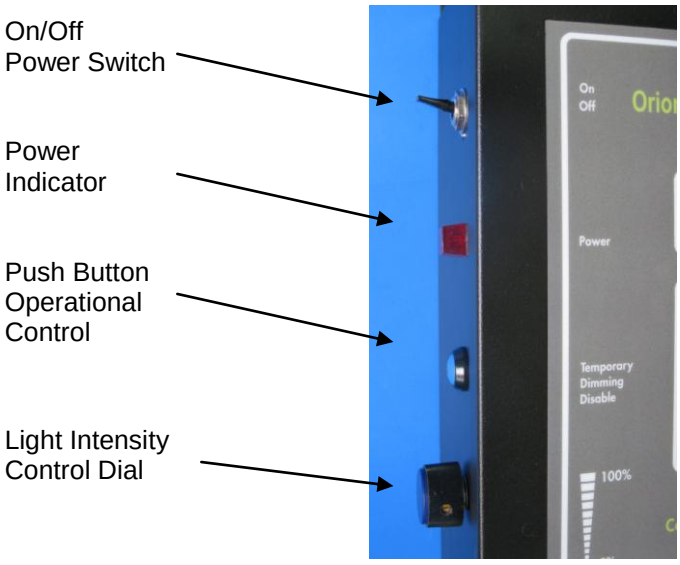

3. Analogue input (0-10 volt) wiring

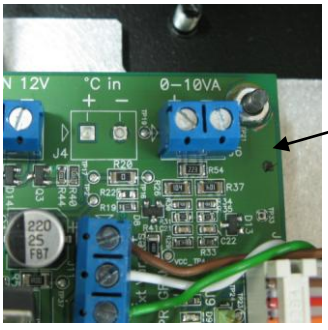

Analogue input (0-10 volt) terminal block.
Designated to connect with poultry house Controller through its analog output (0-10 volt).
Enables dimming by an external controller.

4. Power-up

The system display shows the following LCD display.
Light output automatically rises to the level set by the intensity control knob
(or 0-10V input intensity level as described in the appropriate chapter).

The following LCD display appears:

```
Welcome, waiting
for steady grid
```

Once a steady grid exits, the following LCD display appears:

```
Steady grid
detected...
```

Followed by the operational display (the values displayed here are only examples):

```
14W          4.3A    PWRUP
100%         230V    NL  86
```

Note:
"Welcome" and "Steady grid" messages could not be noticed clearly as they are displayed only momentarily.

Dawn Dusk Functionality
Upon turning on the light, the light intensity will gradually increase from 5% to 100%
at a period of time lasting 100 seconds awakening slowly the birds,
the birds are then better stimulated for the wake.

5. LCD Functional Display

The LCD Display consists of 16x2 characters which display the functional data of the Intensity Controller.

The following figure describes the functional data displayed:

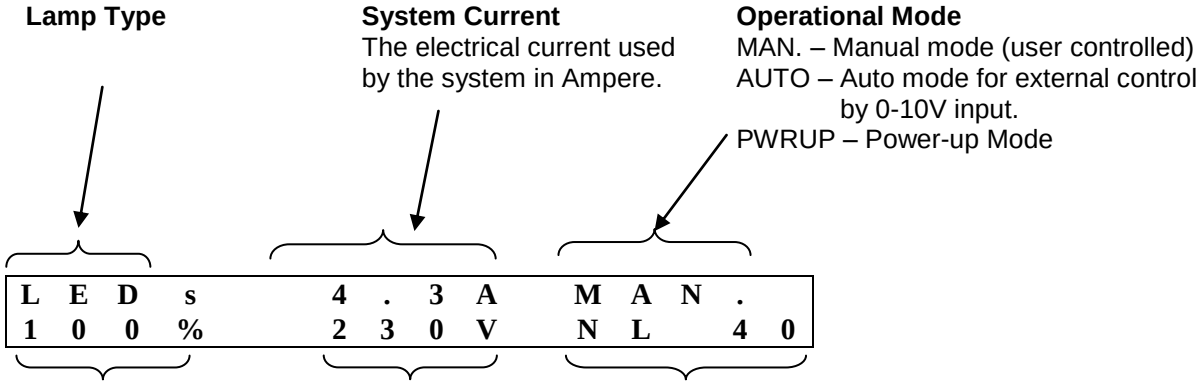

In case an excessive number of lamps are connected to the system it will warn the user by blinking the NLXXX field in the LCD display.

- The system will activate the blinking warning limit in case 210 or more lamps are connected.

6. Wire diameters / Wiring

The incoming electric supply cable should have leads of at least 2.5mm^2; the outgoing wires to the lamps should have leads of at least 1.5mm^2.
Connect the leads to the connectors marked IN 230V, OUT 230V respectively.

7. Maintenance / safety

Always disconnect the main power supply to the Controller prior to opening the front panel.
For example: In case of a need to replace the internal main Fuse.

8. Short Circuit

In the event of a short circuit, repair the failure before replacing the board internal fuse.
Main Fuse characteristics:
Cylindrical fuse, rated Voltage 250V, rated Current 20A fast acting, size 6.3 x 32 mm

9. Manual Operation Mode

The Light Intensity Controller operates in "Manual Mode" when the "0-10V" input lines are disconnected.
The system recognizes when "0-10V" input is set on the input lines and starts working on Auto Mode.

In manual mode, the following operational functionalities are available:

Potentiometer controlled for setting light intensity between 5% - 100%
Push button operational functionality to allow "Poultry House" maintenance procedures in maximum light output for a predetermined time selectable by the user.

The following, is an LCD display example for system manual operational mode:

1	**4**	**W**			**4**	**.**	**3**	**A**		**M**	**A**	**N**	**.**	
	7	**0**	**%**		**2**	**3**	**0**	**V**		**N**	**L**		**4**	**0**

10. Manual Override Operational Mode

When pressing the push button in manual mode, the Controller switches automatically to 100% for a predetermined time selectable by the user.
The predetermined time timer is controlled by the push button as follows:

- 1st push: 30 seconds
- 2nd push: 5 minutes
- 3rd push: 20 minutes
- 4th push: 40 minutes

After the timer has reached its timeout, the Controller resumes operation in the dimmer's original intensity settings.

The following, is an LCD display example for system manual override operational mode:

1	**4**	**W**			**4**	**.**	**3**	**A**		**M**	**A**	**N**	**.**	
1	**0**	**0**	**%**		**2**	**3**	**0**	**V**		**N**	**L**		**4**	**0**

11. Auto Operation Mode

The Light Intensity Controller operates in auto mode when sensing a wires connection of 1-10V on the analog input.
In auto mode, the light intensity level of the Light Intensity Controller is determined by the input voltage level received from an external Poultry House controller.

The following table depicts the Controller dimming operation according to the input voltage ranges:

Input Voltage Range	Dimming Operation
1V – 1.5V	Minimum Intensity – 5%
1.5V – 9.5V	Intensity according to analog input value
9.5V – 10V	Maximum Intensity – 100%

The following, is an LCD display example for system auto operational mode:

1	**4**	**W**			**4**	**.**	**3**	**A**		**A**	**U**	**T**	**O**	
	8	**0**	**%**		**2**	**3**	**0**	**V**		**N**	**L**		**4**	**0**

12. Auto Override Operational Mode

When pressing the push button in Auto mode, the Controller temporarily switches to Manual mode for a preset time controlled by the push button as follows:

- 1st push: 30 seconds
- 2nd push: 5 minutes
- 3rd push: 20 minutes
- 4th push: 40 minutes

After the timer has reached its timeout, the system resumes operation in the Controller's 0-10V analogue input original intensity settings.

The following, is an LCD display example for system manual override operational mode:

1	**4**	**W**			**4**	**.**	**3**	**A**		**A**	**U**	**T**	**O**	
1	**0**	**0**	**%**		**2**	**3**	**0**	**V**		**0**	**5**	**:**	**0**	**0**

13. Diagnostics

The Controller has a diagnostic feature which allows it to monitor record and display fault events which occur and disable the system in case dangerous levels are monitored.

This feature allows the Controller to monitor unsteady grid frequency, high/low voltage level events as well as high/low current level events which might disable the operation of the system.
In case such an event is monitored, the Controller immediately takes precaution actions by disabling the system so to preserve the system and lamps.
The Controller records this event to allow the user to display it on the system's LCD screen.

13.1 System Faults

13.1.1 Over-Voltage Fault:

In case the system detects high voltage of above 265 volts, the system is disabled.
Recovery from such an event is automatic after the system detects a voltage of below 260v.

The following LCD display appears:

Over-Volts.
Wait to recover

When the system senses that the grid voltage has dropped,
it re-initializes automatically and continues its operation.

13.1.2 Under-Voltage Fault:

In case the system detects low voltage of below 195 volts, the system is disabled.
Recovery from such an event is automatic after the system detects a voltage of above 200v.

The following LCD display appears:

Under-volts.
Wait to recover

When the system senses that the grid voltage has risen,
it re-initializes automatically and continues its operation.

13.1.3 Over Current Fault:

In case the system detects current above 16 Amperes, the system is disabled.
A manual recovery is needed from such an event.

The following LCD display appears:

OverCurrent Push
button to retry

The user has to press the push button for the system to attempt recovery.
In case the high current persists the system will be disabled again.

13.1.4 DC failure:

In case the system detects a unidirectional current or missing grid pulses, the system is disabled.
A manual recovery is needed from such an event.

The following LCD display appears:

DC Failure. Push
button to retry

The user has to press the push button for the system to attempt recovery.
In case the high current persists the system will be disabled again.